COMMERCIAL ELECTRIC SERVICE PARTS LIST

MODELS DSE 5–120
SERIES 100 & 102

A.O. Smith Water Heater Parts Fulfillment
125 Southeast Parkway • Franklin, TN 37068
www.hotwater.com • 1-800-433-2545

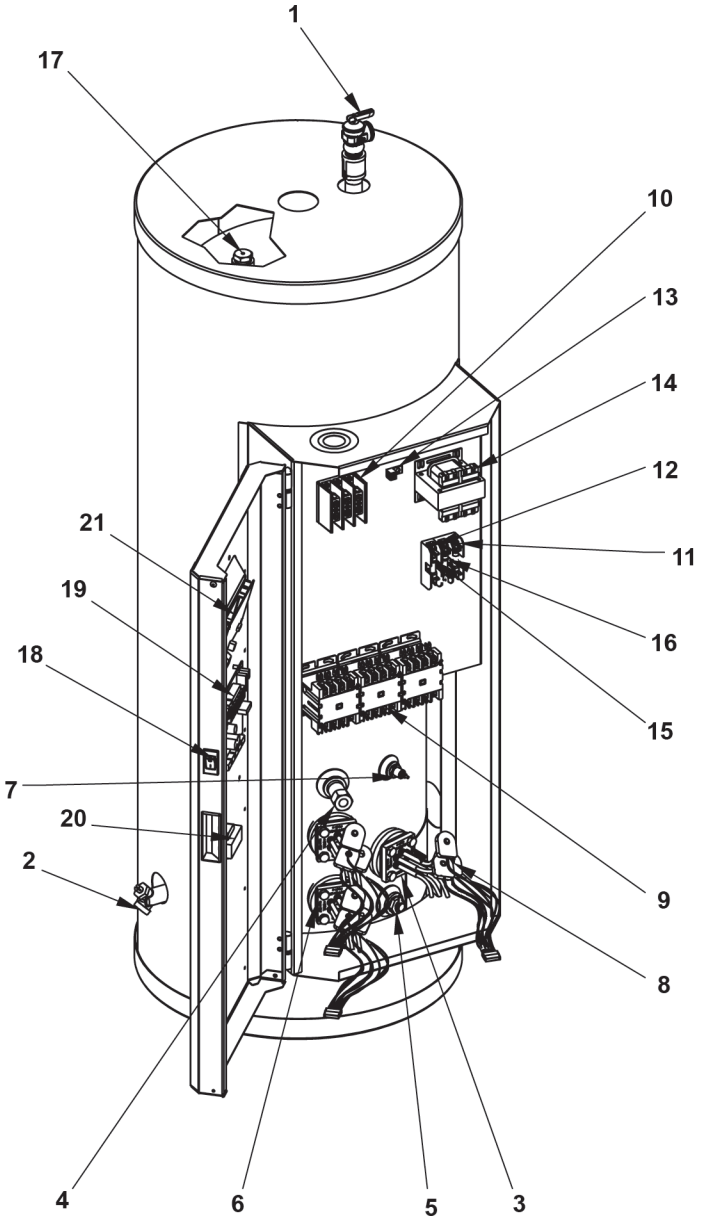

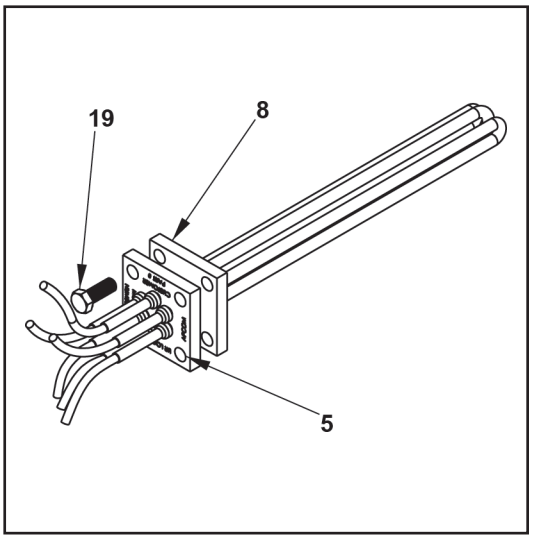

3/4" T & P RELIEF VALVE
AUTOMATIC, SELF-CLOSING TYPES

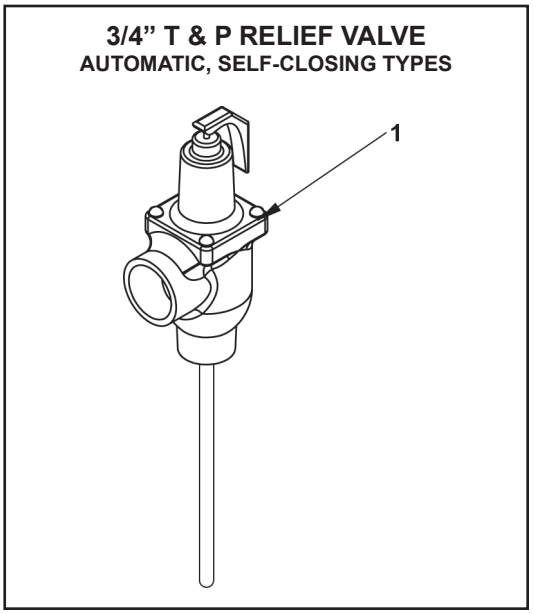

Table 1. ELEMENT CHART AND CONNECTIONS											
Part Number	**KW**	**Volts**	**Phase**	**Element**	**Fits Tank Size (Gals)**	**Part Number**	**KW**	**Volts**	**Phase**	**Element**	**Fits Tank Size (Gals)**
700159-003	2	208 240 480	1 or 3 1 or 3	9.5”	5 Thru 120	9004850105 9004869105	9	208 240 480	1 or 3 1 or 3	15.5”	20 Thru 120
9004835105 9004846105 700159-006	3	208 240 480	1 or 3 1 or 3	9.5”	5 Thru 120	9004851105 9004866105	10	208 240 480	1 or 3 1 or 3	15.5”	2 Thru 120
9004832105 9004847105 700159-012	5	208 240 480	1 or 3 1 or 3	9.5”	5 Thru 120	9004841105 9004852105 9004870105	12	208 240 480	1 or 3 1 or 3	15.0”	65 Thru 120
9004836105 9004848105 9004860105	6	208 240 480	1 or 3 1 or 3	12.0”	10 Thru 120	9004842105 9004843105 9004872105	15	208 240 480	1 or 3 1 or 3	15.0”	65 Thru 120
9004837105 9004849105 9004861105	7.5	208 240 480	1 or 3 1 or 3	14.5”	20 Thru 120	9004834105 9004845105 9004856105	18	208 240 480	1 or 3	15.0”	65 Thru 120
Elements marked 277/480v. Element resistance wires operate at 277v 1 on 480v 3 due to Y connection on Element.											

For stainless steel water heaters contact service department for element part numbers

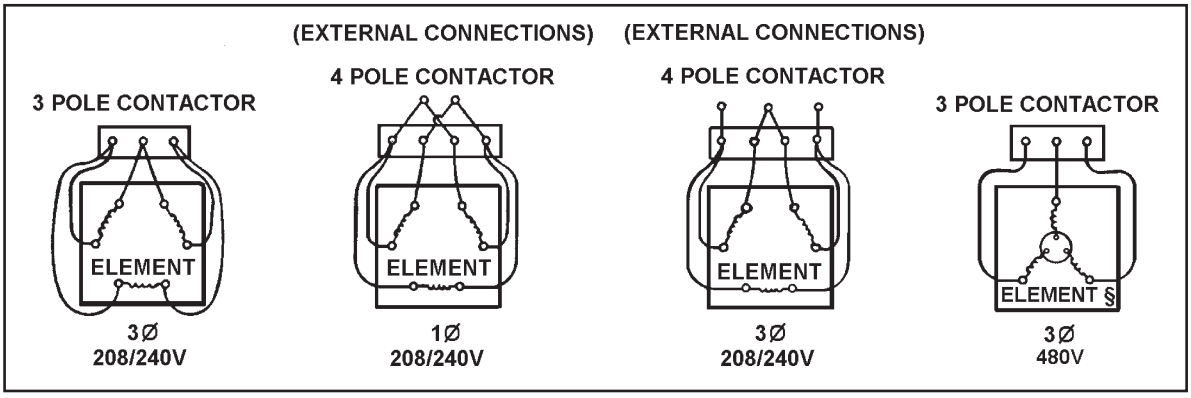

Table 2. CONTROL CIRCUIT FUSING										
Voltage	120	208	220	240	277	380	415	480	575	600
Fuse Type	FNM	FNQ-R	FNQ-R	FNQ-R	FNQ-R	FNQ-R	FNQ-R	FNQ-R	FNQ-R	FNQ-R
VA	Secondary	Primary								
50	**0.6** (02005006)	**1.25** (02006012)	N/A	N/A	**0.8** (02006008)	**0.6** (02006006)	N/A	N/A	**0.4** (02006004)	**0.4** (02006004)
75	**1** (02005010)	**1.5** (02006015)	**1.5** (02006015)	**1.5** (02006015)	**1.25** (02006012)	**0.8** (02006008)	**0.8** (02006008)	**0.6** (02006006)	**0.6** (02006006)	**0.6** (02006006)
100	**1.25** (02005012)	**2** (02006020)	**2** (02006020)	**2** (02006020)	**1.5** (02006015)	**1.25** (02006012)	**1.25** (02006012)	**0.8** (02006008)	**0.8** (02006008)	**0.8** (02006008)
Fuse amp rating is shown in **bold**. Factory part numbers are shown in ().										

Item Number	Part Number	Description
1	9005715205	Relief Valve 3/4”
2	9003906015	3/4” Drain Valve
3	Refer to Table 1	Element
4	9006865015	Temperature Probe
5	198093-000	Electric Anode 22MM 20/100
6	01240406	Element Gasket
7	9004819105	lwco Probe
8	9006867005	Element Current Sensor Assembly
9	9004817105 9004816105	Contactor 4 Pole 120V *Contactor 3 Pole 120V
10	Refer to Parts Fulfillment Department	POWER DISTRIBUTION BLOCK
11	02101031	Secondary Fuse Block - Control Circuit
12	02101032	Primary Fuse Block - Control Circuit
13	04800002	Ground Lug
14	9006863005	Transformer
15	See Table 2	Fuse Buss FNM
16	See Table 2	Fuse Buss FNQ-R
17	9003944005 9003892005	Anode 16” Long 0.840” diameter, 3/4” NPT 33” Long 0.840” diameter, 3/4” NPT
18	9004484215	Pilot Switch
19	See PN on Board	Control Board
20	9006863005	Secondary transformer 120v/24v 25VA
21	9006240005	User Interface Module
22	Refer to Parts Fulfillment Department	**Power Circuit Fusing

* Not Illustrated
** Power Circuit Fusing is required at or above 120 amp

Prior to calling the Parts Department, record your Item ID and Serial number in the space provided. These important identification numbers can be found on the barcode label, adjacent to the water heater rating plate. See sample barcode tag.

Item ID: _____

Serial Number:_____

09642518
model #: 18 DIGIT MODEL NO.
item Id: XXXXXXXXXX
serial #: J07R000385
lot: 3 gas type: 0

A.O. Smith Water Heater Parts Fulfillment • 125 Southeast Parkway • Franklin, TN 37068 • 1-800-433-2545 • www.hotwater.com