A.O. SMITH
WATER PRODUCTS COMPANY

GAS

RESIDENTIAL WATER HEATER PARTS LIST

MODELS FGR-30, 40, 50, 75, 100
SERIES: 224/225

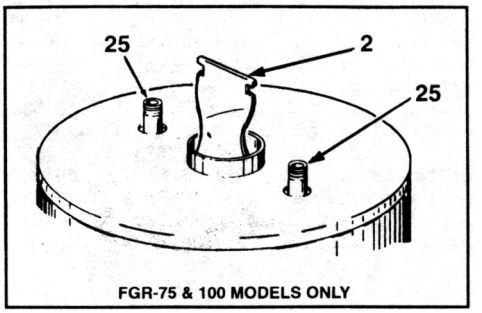

24 T&P VALVE EXTENDER
FOR USE WITH PART NO. 23740-1
(FGR-75 & 100 MODELS)

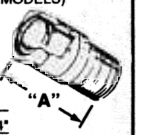

"A" DIMENSION	
PART NO. 42931	3 1/4"
PART NO. 42931-1	2"

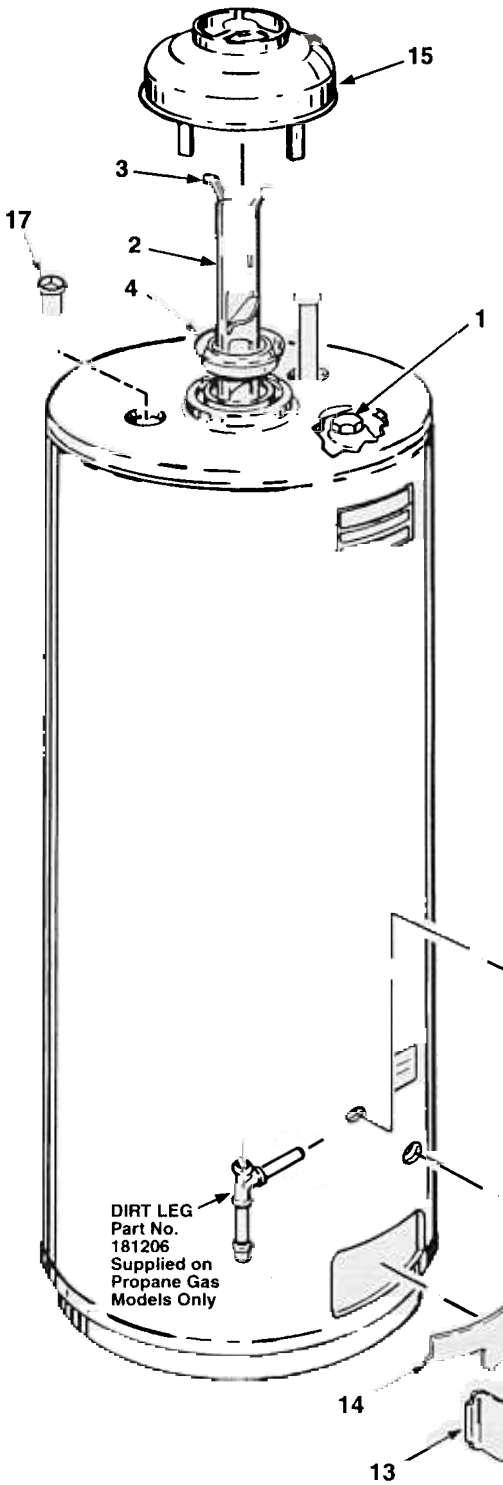

RELIEF VALVE
75 & 100 MODELS

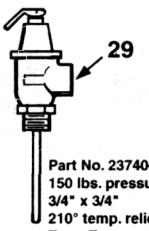

Part No. 23740-1
150 lbs. pressure
3/4" x 3/4"
210° temp. relief
Type: Temperature
& Pressure

RELIEF VALVE
30, 40 & 50 MODELS

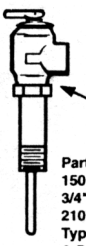

Part No. 43151-2
150 lbs. pressure
3/4" x 3/4"
210° temp. relief
Type: Temperature
& Pressure

5 BURNER ASSEMBLY
FGR-75 & 100 MODELS

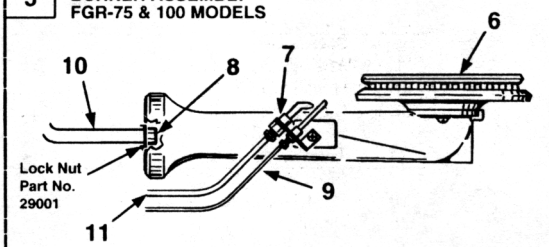

5

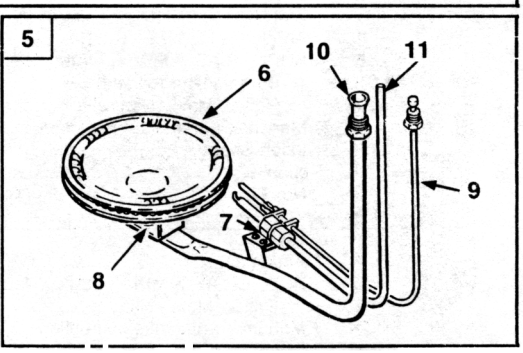

ON FGR-30, 40 & 50 SMR R99 MODELS ONLY

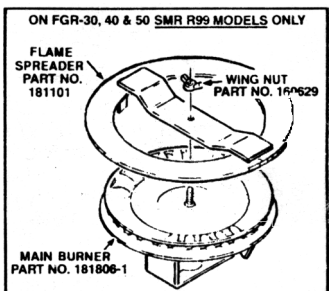

Item	Description	FGR-30 224/225	FGR-40 224/225	FGR-50 224/225	FGR-75 224/225	FGR-100 224/225
1	Anode	43817-42	43817-38	43817-42	180618-42	180618-50
	BAFFLE					
2	Flue Baffle	181589	181589	181589	10089-1	160698-1
3	Hanger, Flue Baffle	181360	181360	181360		
4	Restrictor, Flue Baffle	34894	34894	34894	34505	34505
5	BURNER ASSEMBLY, MAIN - Natural	181480-4	181480-33	181480-8	180653-4	180653-5
	BURNER ASSEMBLY, MAIN - Propane	181780	181780-12	181780-2	181786	181786-1
6	Burner, Main - Natural	180940	180940	180940	41157-1	41157-2
	Burner, Main - Propane	180940-1	180940-1	180940-1	41157	41157-1
7	Burner, Pilot - Natural	---		---	160228	160228
	Burner, Pilot - Propane	---	---	---	160228-1	160228-1
8	Orifice, Main - Natural	181508-31	181508-31	181508-31	29366-23	29366-19
	Orifice, Main - Propane	181791-50	181791-50	181791-50	181778-37	181778-37
9	Thermocouple	23675	23675	23675	23675	23675
10	Tube, Main Burner - Natural	181482-2	181482-10	181482-5	190200-1	190200-2
	Tube, Main Burner - Propane	181796-2	181796-10	181796-5	181785	181785
11	Tube, Pilot	23330	23330	23330	23330	23330
12	Collar, Pipe	20172-14	20172-14	20172-14	20172-6	20172-6
	DOOR					
13	Outer	180522	180522	180522	39112-1	39112-1
14	Inner	180596	180596	180596	39923	39923
15	Draft Hood	181082	181082	181082	39072	39072
	HEAT TRAP ("T" Models)					
16	Inlet	181068-35	181068-35	181068-35		
17	Outlet	181235	181235	181235		
	LABEL					
18	*Flammable Warning	181139	181139	181139	181139	181139
19	*Lighting & Operating	182553	182553	182553	182554	182554
20	*Scald Warning	181138	181138	181138	181138	181138
21	*Temperature	182734	182734	182734	182734	182734
22	*Manual, Instruction	182581	182581	182581	182581	182581
23	*Insert Sheet	181638	181638	181638	---	---
24	Nipple, Extension	---	---	---	43231-1	43231-1
25	Nipple, Pipe	---	---	---	43879	41319
26	Thermostat - Natural	180193-4	180193-4	180193-4	23736	23736
	Thermostat - Propane	181775-3	181775-3	181775-3	181775-4	181775-4
27	Tube, Inlet	21067-37	21067-37	21067-37	41072-29	40542-30
28	Valve, Drain	42037-2	42037-2	42037-2	26273	26273
29	Valve, Relief	43151-2	43151-2	43151-2	43151-2	43151-2
	SMR S44					
1	Anode	29109-42	29109-38	29109-42	29109-42	29109-50
18	Heat Trap, Inlet	181295-35	181295-35	181295-35	---	---
28	Nipple	---	---	---	86979-5	92706-3
	Sleeve, 0.84" Dia. Anode	182380	182380	182380	182380	182380
33	Tube, Inlet	---	---		41931-29	41932-30
	SMR H43					
18	Heat Trap, Inlet	181295-35	181295-35	181295-35	---	---
28	Nipple	---		---	86979-5	92706-3
33	Tube, Inlet			---	41312-29	41314-40
	SMR R99					
1	Anode	181125-42	181125-38	181125-42		---
5	BURNER ASSEMBLY, MAIN - Natural	181480-13	181480-35	181480-15		---
6	Burner Head Assembly	180940-2	180940-2	180940-2		---
7	Orifice, Main - Natural	181508-33	181508-33	181508-33		---
24	Manual, Earthquake Instruction	181809	181809	181809		
25	Insert Sheet	182552	182552	182552		
28	Nipple	38469-4	38469-4	38469-4		
	Nox Flame Spreader Assembly - Natural	181101	181101	181101		
	Wing Nut	160629	160629	160629		
	SMR S06					
1	Anode	181125-42	181125-38	181125-42		---
5	BURNER ASSEMBLY, MAIN - Natural .	181480-10	181480-34	181480-12	---	---
7	Orifice, Main - Natural	181508-32	181508-32	181508-32	---	---
24	Manual, Earthquake Instruction	181809	181809	181809	---	---
25	Insert Sheet	182552	182552	182552	182552	182552
28	Nipple	38469-4	38469-4	38469-4	---	---
	SMR S19					
1	Anode	43816-42	43816-38	43816-42	29109-42	29109-50
	SMR K32					
1	Anode	43816-42	43816-38	43816-42	29109-42	29109-50
5	BURNER ASSEMBLY, MAIN - Natural	181480-10	181480-34	181480-12	180653-8	180653-9
7	Orifice, Main - Natural	181508-32	181508-32	181508-32	29366-26	29366-21
11	Tube, Main Burner - Natural	181482-2	181482-10	181482-5	190200-5	190200-6
	High Altitude Assembly	182573	182573	182573	182573	182573
	SMR S29					
1	Anode	43816-42	43816-38	43816-42	------	------
	Nipple	38469-10	38469-10	38469-10	------	------
	SMR S45					
1	Anode	------	181125-42	181125-42	------	------
28	Nipple	------	38469-4	38469-4	------	------
36	Valve, Relief	------	43151-2	43151-2	------	------
	SMR S22					
21	Label - Lighting & Operating	------	------	------	161043	161043
24	Manual, Instruction	------	------	------	180856	180856
	Tube, Relief Valve Runoff	------	------	------	180667	180667

NOTE: Underlined parts are recommended stock items for emergency replacement. Consider gas used in your area only.

* Not illustrated.