GAS

COMMERCIAL BOILER PARTS LIST

MODELS HW-700 S,D,M THRU 2200 S,D,M SERIES 830
NATURAL GAS ONLY

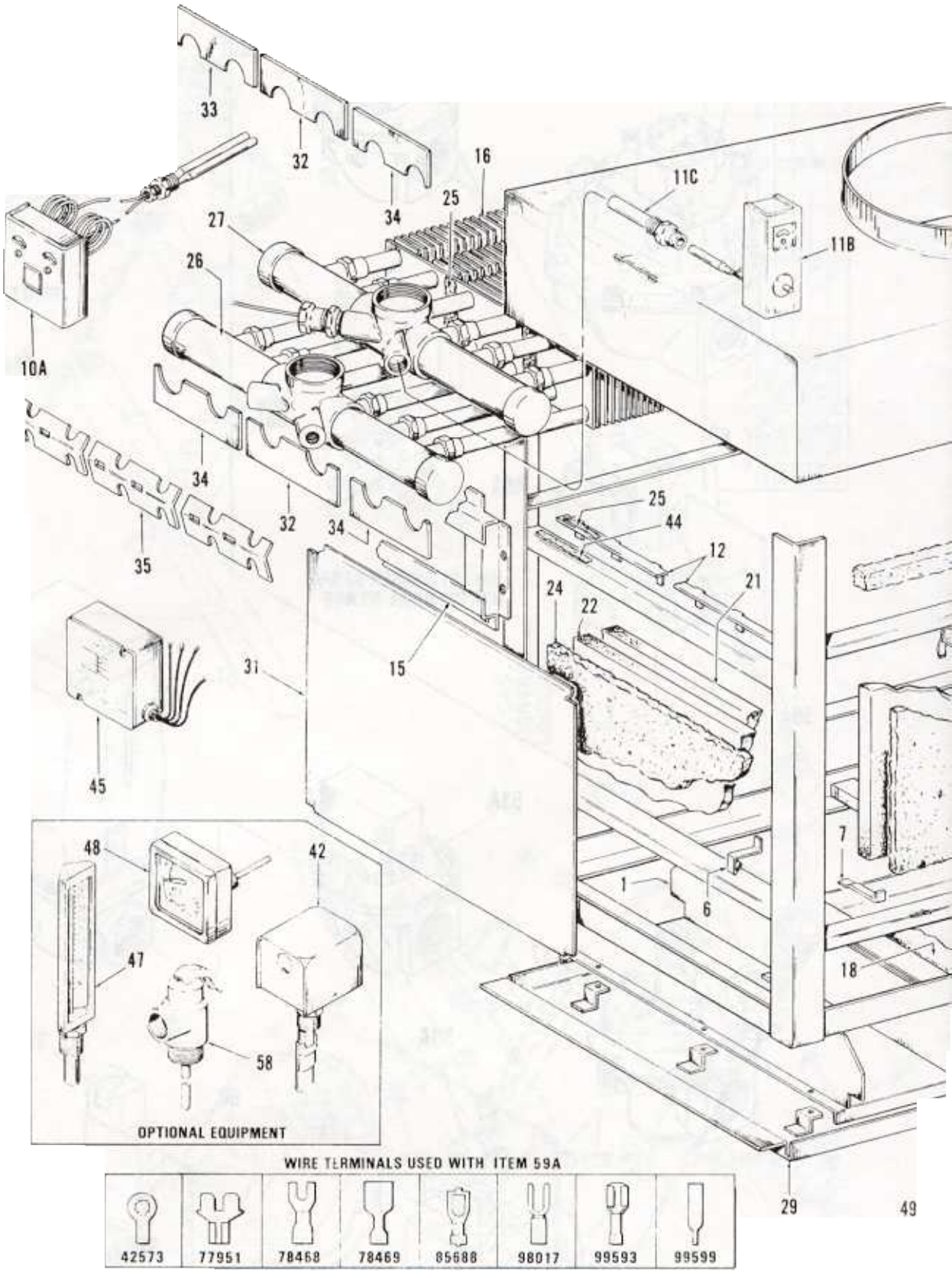

WIRE TERMINALS USED WITH ITEM 59A

42573	77951	78468	78469	85688	98017	99593	99599

A.O. SMITH
WATER PRODUCTS COMPANY

LIST
830
NLY

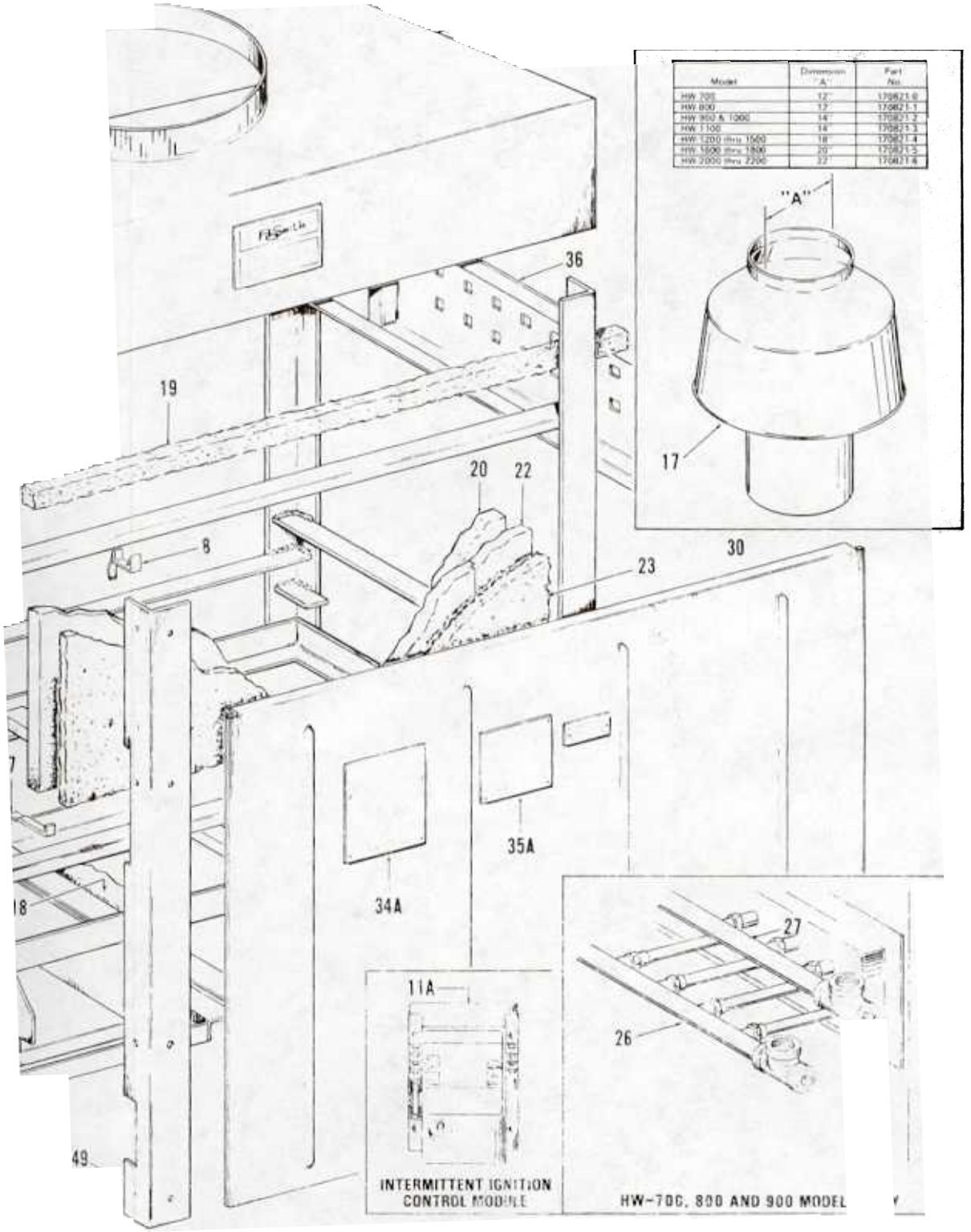

Model	Dimension "A"	Part No.
HW 700	12"	170821-0
HW 800	13"	170821-1
HW 900 & 1000	14"	170821-2
HW 1100	14"	170821-3
HW 1200 thru 1500	16"	170821-4
HW 1600 thru 1800	20"	170821-5
HW 2000 thru 2200	22"	170821-6

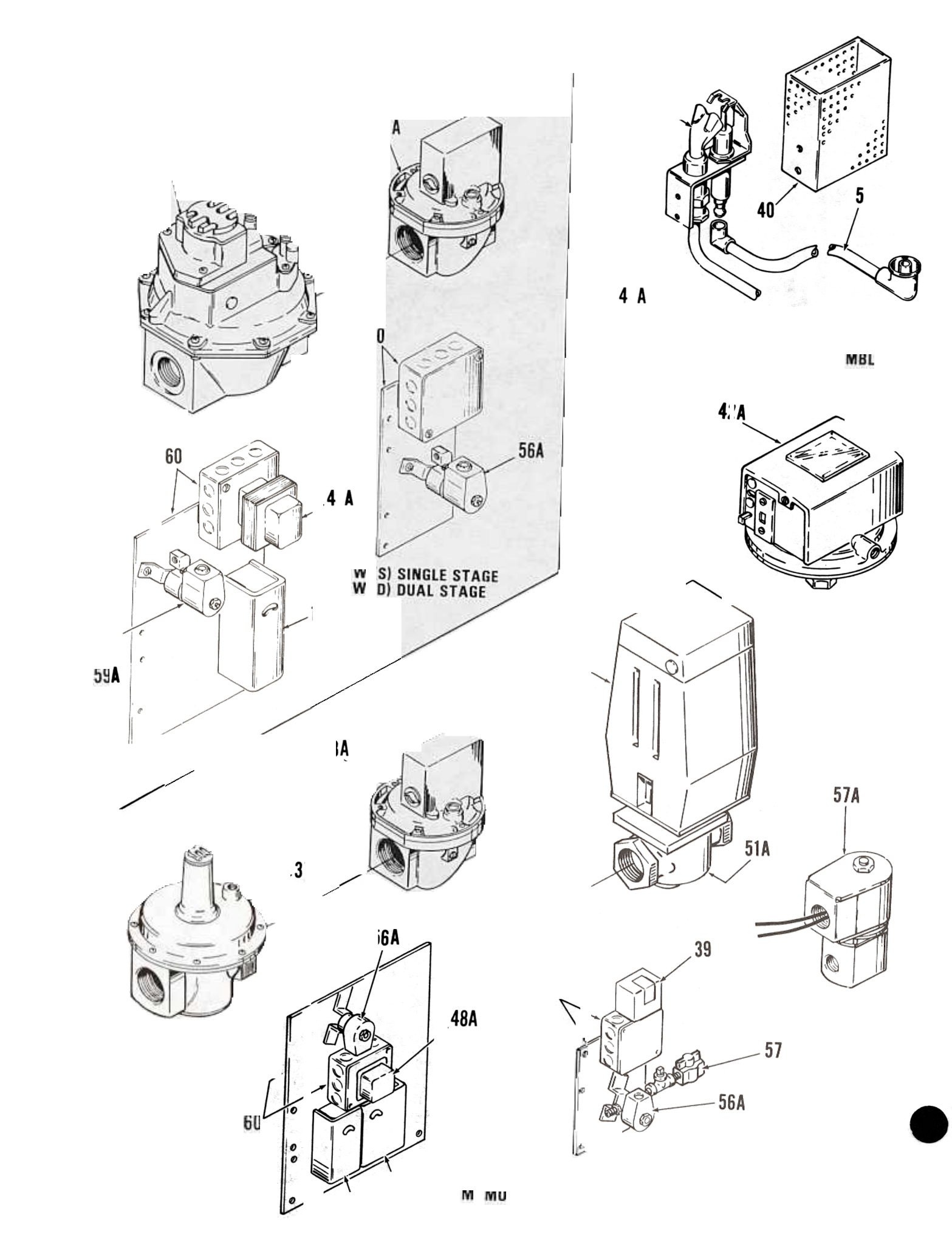
A
40
5
4 A
MBL
0
56A
60
4 A
59A
S) SINGLE STAGE
D) DUAL STAGE
51A
57A
39
57
56A
48A
60

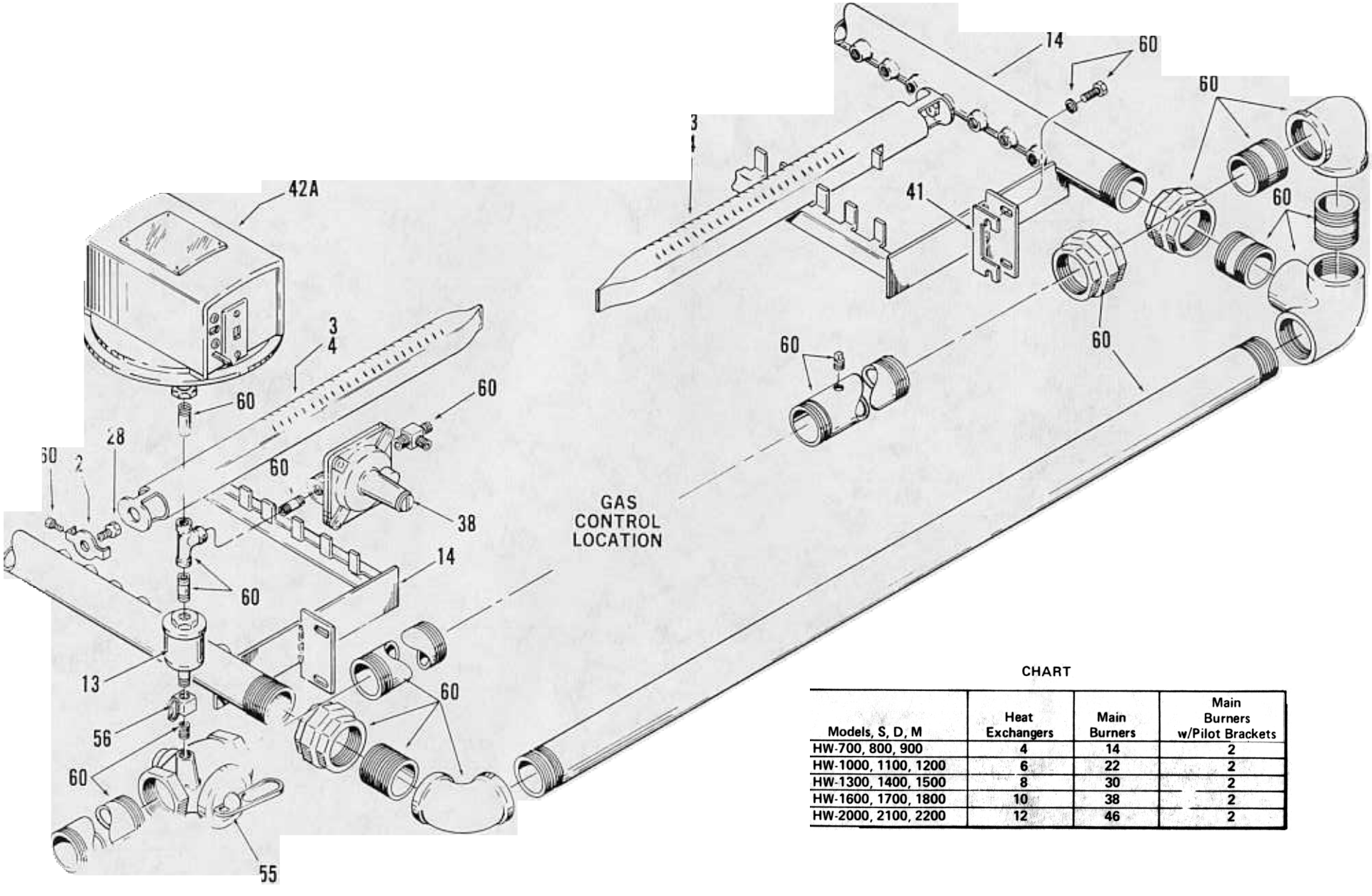

CHART

Models, S, D, M	Heat Exchangers	Main Burners	Main Burners w/Pilot Brackets
HW-700, 800, 900	4	14	2
HW-1000, 1100, 1200	6	22	2
HW-1300, 1400, 1500	8	30	2
HW-1600, 1700, 1800	10	38	2
HW-2000, 2100, 2200	12	46	2

tem	Description	700 800	900	1000 1100	1200	1300	1400 1500	1600 1700	1800	2000 2100	2200
39	Relay-"M" Models Only	170317	170317	170317	170317	170317	170317	170317	170317	170317	170317
40	Shield, Pilot	98204	98204	98204	98204	98204	98204	98204	98204	98204	98204
41	Shim	69562	69562	69562	69562	69562	69562	69562	69562	69562	69562
42	Switch, Flow-1" (Optional)	78168	78168	78168	78168	78168	78168	78168	78168	78168	78168
42A	Switch, Low Pressure	99565	99565	99565	99565	99565	99565	99565	99565	99565	99565
44	Tape, Listing	95072-1	95072-1	95072-1	95072-1	95072-1	95072-1	95072-1	95072-1	95072-1	95072-1
45	Thermal Balancer	98190	98190	98190	98190	98190	98190	98190	98190	98190	98190
47	Thermometer (Optional)	93042	93042	93042	93042	93042	93042	93042	93042	93042	93042
48	Therpressuremeter (Optional)	91461-1	91461-1	91461-1	91461-1	91461-1	91461-1	91461-1	91461-1	91461-1	91461-1
48A	Transformer	170324	170324	170324	170324	170324	170324	170324	170324	170324	170324
49	Trim-Angle:										
	Left Front	69561	69561	69561	69561	69561	69561	69561	69561	69561	69561
	Right Front	69561-1	69561-1	69561-1	69561-1	69561-1	69561-1	69561-1	69561-1	69561-1	69561-1
	Left Rear	69561-2	69561-2	69561-2	69561-2	69561-2	69561-2	69561-2	69561-2	69561-2	69561-2
	Right Rear	69561-3	69561-3	69561-3	69561-3	69561-3	69561-3	69561-3	69561-3	69561-3	69561-3
49A	Tubing, Pilot-With Assorted Fittings (User to Cut to Required Length)	1417-60	1417-60	1417-60	1417-60	1417-60	1417-60	1417-60	1417-60	1417-60	1417-60
51	Valve, Actuator-"M" Models Only	69164	69164	69164	69164	69164	69164	69164	69164	69164	69164
51A	Valve Body	99860-1	99860-1	99860-1	99860-1	99860-2	99860-2	99860-2	99860-2	99860-3	99860-3
52	*Valve, Bleed	98765	98765	98765	98765	98765	98765	98765	98765	98765	98765
53	Valve, Main Gas:										
	"S" Models-Single Stage	69388	69388	69388	69388	69387	69387	69386	69386	69386	69386
	"D" Models-Dual Stage	69392	69392	69392	69392	69390	69390	69389	69389	69389	69389
53A	Valve, Redundant Gas	77780	77780	77780	77780	77780-1	77780-1	77780-2	77780-2	77780-2	77780-2
55	Valve, Main Manual	3423-1	3423-1	3423-1	3423-1	96479-3	96479-3	96479-3	96479-3	69143	69143
56	Valve, Pilot	69104	69104	69104	69104	69104	69104	69104	69104	69104	69104
56A	Valve, Pilot Safety	170277	170277	170277	170277	170277	170277	170277	170277	170277	170277
57	Valve, Pilot Adjusting	69102	69102	69102	69102	69102	69102	69102	69102	69102	69102
57A	Valve, Pilot Solenoid	77782-2	77782-2	77782-2	77782-2	77782-2	77782-2	77782-2	77782-2	77782-2	77782-2
58	Valve, Relief: (Optional)										
	30 PSI	69311	98883	98883	98883	98883	69045	69045	69045	69045	69312
	125 PSI	97558	97558	97558	97558	97558	97558	97558	97558	97558	68847-1
59A	+**Wire (See Illustration For Terminals-Order As Required.)										
	16 AWG Solid Copper, 200°C										
	Black	76457	76457	76457	76457	76457	76457	76457	76457	76457	76457
	Red	76458	76458	76458	76458	76458	76458	76458	76458	76458	76458
	White	76456	76456	76456	76456	76456	76456	76456	76456	76456	76456
	16 AWG Stranded, 105°C										
	Black	86578	86578	86578	86578	86578	86578	86578	86578	86578	86578
	Red	86579	86579	86579	86579	86579	86579	86579	86579	86579	86579
	White	86580	86580	86580	86580	86580	86580	86580	86580	86580	86580
	14 AWG Stranded, 105°C										
	Green	41972	41972	41972	41972	41972	41972	41972	41972	41972	41972
60	Standard Hardware Items to be Purchased Locally.										

*Not illustrated.

**Refer to chart on page 2 for amount of parts per unit.

+When ordering wire, indicate length required in inches. (Example: 76457-100 equals 100" Length.)

Part numbers underlined are recommended items for emergency replacement.

Request parts from Product Service Division by giving all information such as model and series number, type of gas and specifications.

Parts List PSD-3-135/a Supersedes Parts List PSD-3-135.

Item	Description	300	900	1100	1200	1300	1500	1700	1800	2100	2200
1	Baffle Assembly	59474-4	69474-4	69474	69474	69474-1	69474-1	69474-2	69474-2	69474-3	69474-3
2	Bracket, Orifice	98044	98044	98044	98044	98044	98044	98044	98044	98044	98044
3	**Burner, Main	170831	170831	170831	170831	170831	170831	170831	170831	170831	170831
4	**Burner, Main-With Pilot Bracket	170831-1	170831-1	170831-1	170831-1	170831-1	170831-1	170831-1	170831-1	170831-	170831-1
5	Burner, Pilot-With Orifice	69325	69325	69325	69325	69325	69325	69325	69325	69325	69325
5A	Cable Assembly	69326	69326	69326	69326	69326	69326	69326	69326	69326	69326
6	Clip, Insulation	69226	69226	69226	69226	69226	- - - -	- - - -	- - - -	- - - -	- - - -
7	Clip, Insulation	69569	69569	69569	69569	69569	69569	69569	69569	69569	69569
8	Clip, Insulation	69560	69560	69560	69560	69560	69560	69560	69560	69560	69560
9	Collector, Flue	69542-5	69542-6	69542-4	69542	69542-1	69542-1	69542-2	69542-2	69542-3	69542-3
10	Control, Temperature Limit:										
	M and S Models	93661-1	93661-1	93661-1	93661-1	93661-1	93661-1	93661-1	93661-1	93661-1	93661-1
10A	D Models	97474-1	97474-1	97474-1	97474-1	97474-1	97474-1	97474-1	97474-1	97474-1	97474-1
	Well, 3/4 NPT-M and S Models Only	7855	7855	7855	7855	7855	7855	7855	7855	7855	7855
11	Control, Module Temperature-										
	"M" Models Only	69165-1	69165-1	69165-1	69165-1	69165-1	69165-1	69165-1	69165-1	69165-1	69165-1
11A	*Control, Pilot Module (I.I.D.)	69323-1	69323-1	69323-1	69323-1	69323-1	69323-1	69323-1	69323-1	69323-1	69323-1
11B	*Controller, Manual Reset Limit (E.C.O.)	69039	69039	69039	69039	69039	69039	69039	69039	69039	69039
11C	Well, 3/4 NPT	69039-1	69039-1	69039-1	69039-1	69039-1	69039-1	69039-1	69039-1	69039-1	69039-1
11D	*Decal, Wiring:										
	"S" Models	170311	170311	170311	170311	170311	170311	170311	170311	170311	170311
	"D" Models	170312	170312	170312	170312	170312	170312	170312	170312	170312	170312
	"M" Models	170313	170313	170313	170313	170313	170313	170313	170313	170313	170313
12	Deflector, Gas:										
	7-5/8" Long	69568	69568	- - - -	- - - -	69568	69568	69568	69568	69568	69568
	11-7/16" Long	- - - -	- - - -	69554	69554	69554	69554	69554	69554	69554	69554
13	Filter, Pilot	90511	90511	90511	90511	90511	90511	90511	90511	90511	90511
14	Frame Assembly, Burner	69527-4	69527-4	69527	69527	69527-1	69527-1	69527-2	69527-2	69527-3	69527-3
15	Frame Assembly, Seal	69555-4	69555-4	69555	69555	69555-1	69555-1	69555-2	69555-2	69555-3	69555-3
16	**Heat Exchanger	68838-10	68838-10	68838-10	68838-10	68838-10	68838-10	68838-10	68838-10	68838-10	68838-10
17	Hood, Draft	69309	69141	69141	69145	69146	69146	69147	69147	69148	69148
18	Insulation	69163	69163	69163	69163	69163	69163	69163	69163	69163	69163
19	Insulation 2" x 2" x 36"	69567	69567	69567	69567	69567	69567	69567	69567	69567	69567
20	Insulation, Inner-Front and Rear	69282-5	69282-5	69282	69282	69282-1	69282-1	69282-3	69282-3	69282-3	69282-3
21	Insulation, Inner-Side	69281	69281	69281	69281	69281	69281	69281	69281	69281	69281
22	Insulation, Middle	69283	69283	69283	69283	69283	69283	69283	69283	69283	69283
23	Insulation, Outer-Front and Rear	69286-4	69286-4	69286	69286	69286-1	69286-1	69286-3	69286-3	69286-3	69286-3
24	Insulation, Outer-Side	69285	69285	69285	69285	69285	69285	69285	69285	69285	69285
25	Insulation, Wet Pack	69294	69294	69294	69294	69294	69294	69294	69294	69294	69294
26	Manifold, Water Inlet	77004	77004	68712	68712	68712-1	68712-1	69514-2	69514-2	69514-3	69514-3
27	Manifold, Water Outlet	77004	77004	68712	68712	68712-1	68712-1	69515-2	69515-2	69515-3	69515-3
28	Orifice, Main Burner:										
	Model 800, 1000, 1500 & 1700 Only	29366-30	- - - -	29366-1.5	- - - -	- - - -	29366-125	29366-31	- - - -	- - - -	- - - -
	All Other Models	29366-31	29366-29	29366-3	29366-30	29366-32	29366-31	29366-32	29366-125	29366-31	29366-125
29	Pan Assembly, Drain	69479-4	69479-4	69479	69479	69479-1	69479-1	69479-2	69479-2	69479-3	69479-3
30	Panel, Front and Rear	69550-4	69550-4	69550	69550	69550-1	69550-1	69550-2	69550-2	69550-3	69550-3
31	Panel, Side	69551	69551	69551	69551	69551	69551	69551	69551	69551	69551
32	Plate, Inner Seal	- - - -		68770	68770	68770	68770	68770	68770	68770	68770
33	Plate, Inner Seal	68770-1	68770-1	68770-1	68770-1	68770-1	68770-1	68770-1	68770-1	68770-1	68770-1
34	Plate, Inner Seal	68770-2	68770-2	68770-2	68770-2	68770-2	68770-2	68770-2	68770-2	68770-2	68770-2
34A	Plate, Lighting and Operating	170315	170315	170315	170315	170315	170315	170315	170315	170315	170315
34B	*Plate, Maximizer	170330	170330	170330	170330	170330	170330	170330	170330	170330	170330
35	Plate, Outside Seal	68776	68776	68776	68776	68776	68776	68776	68776	68776	68776
35A	Plate, Rating	170319	170319	170319	170319	170319	170319	170319	170319	170319	170319
36	Plate, Rear Seal	68816-4	68816-4	68816	68816	68816-1	68816-1	68816-2	68816-2	68816-3	68816-3
37	Regulator, Gas-"M" Models Only	96481-5	96481-5	96481-5	96481-5	96481-2	96481-2	96481-2	96481-2	69140	69140
38	Regulator, Pilot	99382		99382	99382	99382	99382	99382	99382	99382	99382